# MILANO

WALL MIXER

## Installation & Owner's Guide

FINISHES IN THIS GUIDE

| | |
|---|---|
| **MIL-WM-C** | Chrome |
| **MIL-WM-MB** | Matte Black |
| **MIL-WM-BN** | Brushed Nickel |
| **MIL-WM-GM** | Brushed Gunmetal |
| **MIL-WM-AB** | Antique Brass |
| **MIL-WM-BB** | Brushed Brass |

Read this guide before you begin.

**This product must be installed by a licensed plumber**, to AS/NZS 3500.

**IVM-MAN-MWM-AU-01**
Revision A · October 2026 · Australian edition

# Safety and compliance

Read this page in full before you begin. Share it with your installer.

**▲ LICENSED PLUMBER**

This product must be installed by a licensed plumber. All work must comply with AS/NZS 3500. This is a general guide; your installer may adapt the method to suit your site.

**Before you begin**

Unpack the mixer and check it for damage and missing parts. Confirm this is the model and finish you ordered.

**Flush the pipework**

Flush the supply pipes before the valve is connected, to clear any debris that could damage the cartridge.

**Set the depth first**

The valve depth decides how the plates and lever finish against the wall. Set it before the wall is lined and tiled.

**Water pressure**

The mixer is rated for **50–800 kPa**. If your supply is above 500 kPa, your plumber will fit a pressure-limiting valve.

**Water temperature**

Hot water supply between **5 and 80 °C**.

**Keep the parts**

Keep the plates, lever and Allen key safe until the wall is finished.

**TEST BEFORE YOU FINISH**

Test fully for leaks before you tile, line or finish anything that would make the connections hard to reach. We can't cover the cost of removing a product that was not tested before finishing work.

# Your Milano

A wall-mounted mixer that controls a shower, bath spout or hand shower from one lever. All dimensions in millimetres.

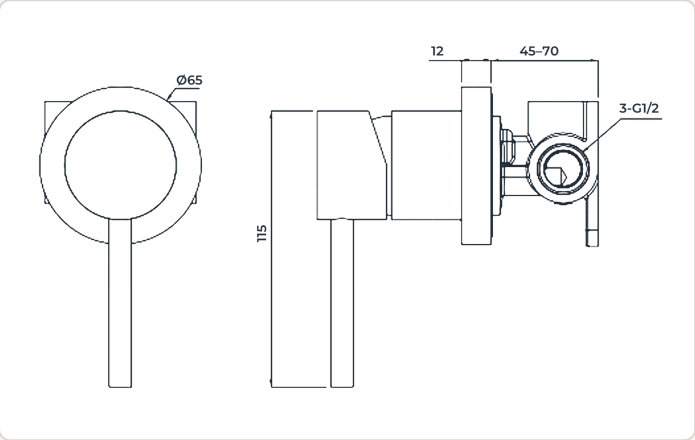


## SPECIFICATION

| | |
|---|---|
| **Wall plate** | Ø65 mm |
| **Valve depth in wall** | 45–70 mm |
| **Lever** | 115 mm |
| **Cartridge** | Citec ceramic |
| **Body** | DZR brass |
| **WaterMark licence** | WM-022467 · AS 3718 |

## INSTALLATION DATA

| | |
|---|---|
| **Mounting** | In-wall valve |
| **Valve connections** | 3 × ½" BSP (hot, cold and outlet) |
| **Wall recess** | 80 × 80 mm |
| **Wall hole** | Ø50 mm |
| **Finished depth** | 45–70 mm |
| **Working pressure** | 50–800 kPa (factory rating) |
| **Water temperature** | 5–80 °C |
| **Installation** | Licensed plumber, to AS/NZS 3500 |

# Planning

Check these with your installer before anything is cut or fixed.

**Valve depth**
The valve sits so the finished wall face is **45–70 mm** in front of it.

**Recess**
Allow an **80 × 80 mm** recess for the valve body.

**Wall hole**
One **Ø50 mm** hole through the wall lining.

**Outlet**
One ½" BSP outlet to your shower, spout or hand shower (sold separately).

**HOT AND COLD**
Hot connects on the **left** and cold on the **right**, viewed from the front.

# Installation

The steps follow the manufacturer's method.

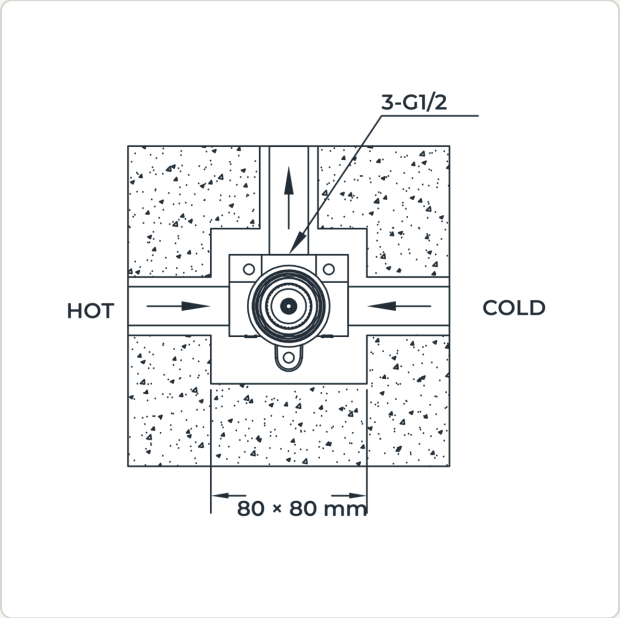


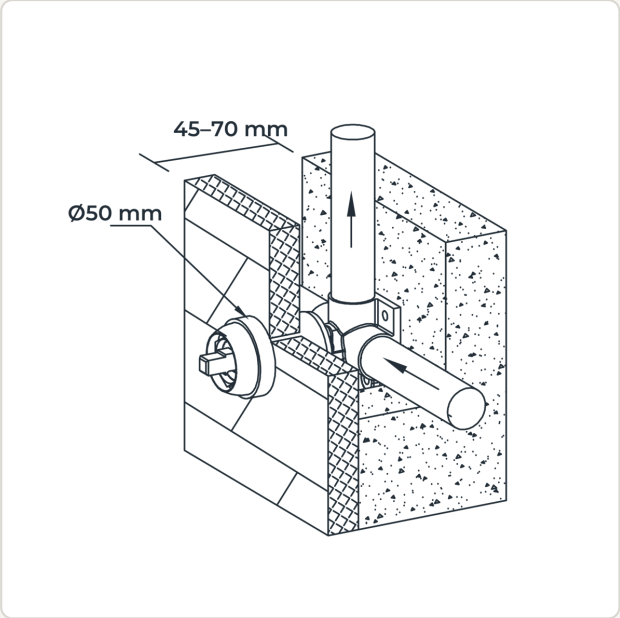


### 1 Install the valve

Position the valve and connect the hot and cold supply pipes, and the pipework to the outlet.

### 2 Check opening and depth

Check the wall opening and the valve depth against the installation data, so the plates finish flush.

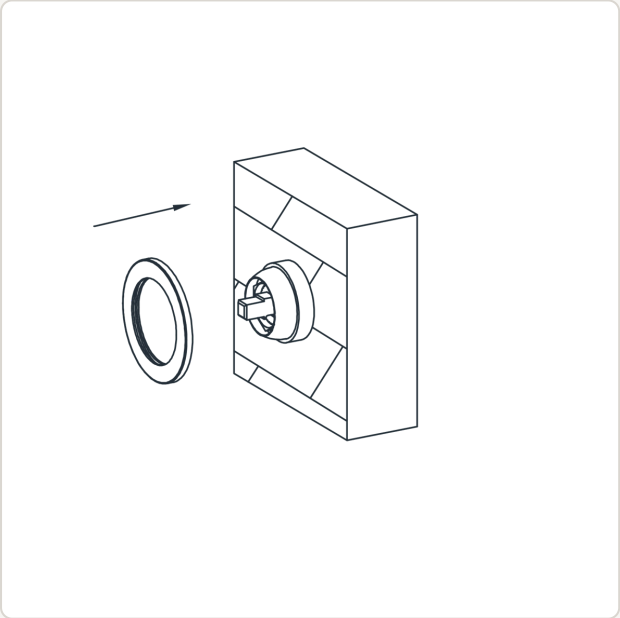

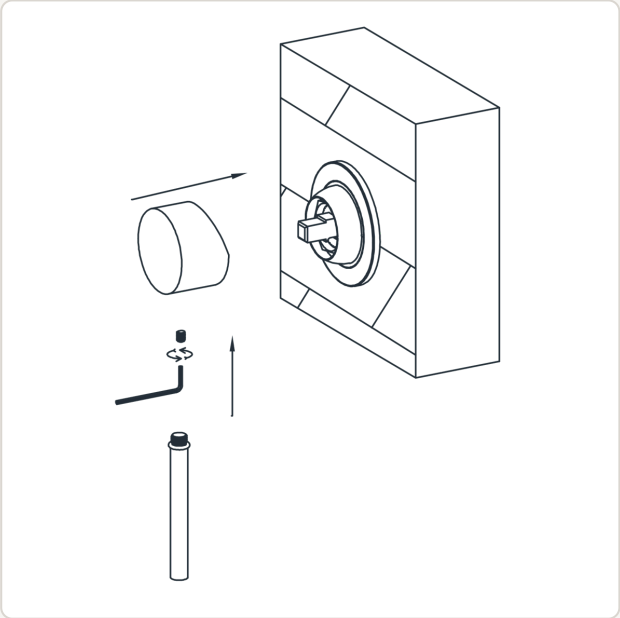

### 3 Fit the plates

Once the wall is finished, fit the cover plates securely.

### 4 Fit the lever

Fit the lever and tighten it with the Allen key provided. Test the mixer and every joint for leaks.

# Using and caring for your Milano

**The lever**

The lever controls the flow and the temperature.

**Cleaning**

Clean with warm soapy water and a **soft cloth** only. Rinse and dry to keep the finish looking its best.

**Never use**

Cleaners containing acids (including vinegar), chlorine or caustic soda, abrasive powders, scourers or brushes. They damage the finish and are not covered by the warranty.

## TROUBLESHOOTING

| | |
|---|---|
| **The lever feels loose** | Re-tighten the grub screw with the Allen key. |
| **Flow is low** | Check the outlet is clean and free of debris. |

Still not right? Email us with your order number (page 07).

# Warranty and support

| | |
|---|---|
| **Tap body** | 15 years |
| **Cartridges, valves & aerators** | 7 years |
| **Surface finish** | 3 years |
| **Washers & O-rings** | 2 years |

Parts warranty for home use, original purchaser and installation, proof of purchase required. Full terms at invoguemirrors.com.au/pages/warranty. In addition to your rights under the Australian Consumer Law.

### QUESTIONS OR A CLAIM

Email us with your order number and a photo of the issue.
**info@invoguemirrors.com.au**
Full warranty terms:
invoguemirrors.com.au/pages/warranty

### YOUR RECORD

| | |
|---|---|
| **Finish and product code** | |
| **Date purchased** | |
| **Order number** | |
| **Installed by** | |
| **Installation date** | |